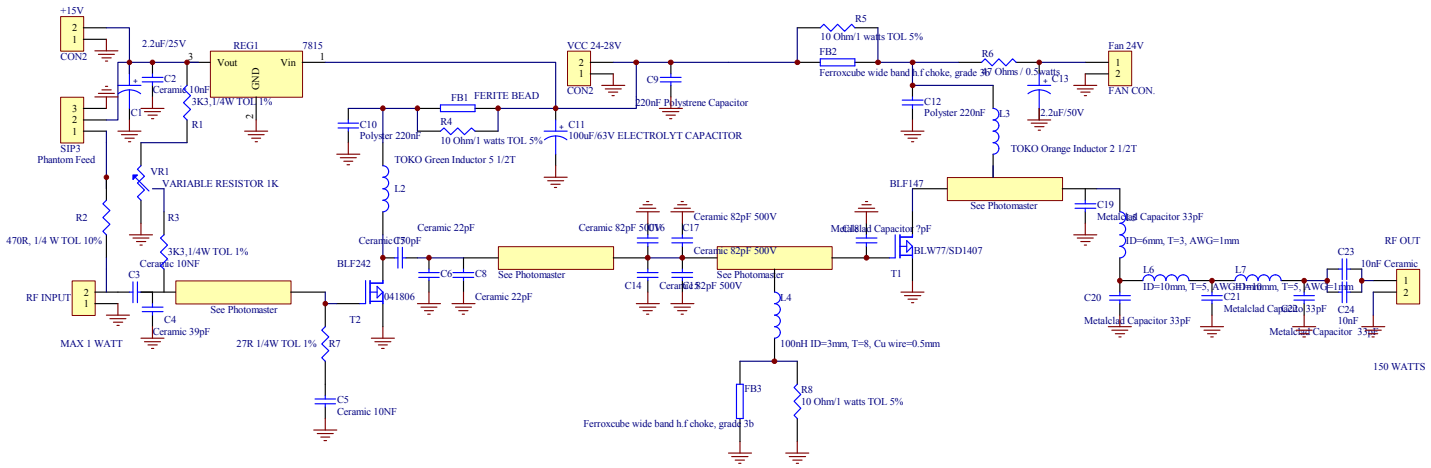
+15V
CON2
2.2uF/25V
C2
Ceramic 10nF
REG1
7815
Vout
Vin
GND
3K3,1/4W TOL 1%
R1
C1
SIP3
Phantom Feed
VR1
VARIABLE RESISTOR 1K
R2
470R, 1/4 W TOL 10%
R3
3K3,1/4W TOL 1%
Ceramic 10NF
C3
RF INPUT
MAX 1 WATT
C4
Ceramic 39pF
See Photomaster
27R 1/4W TOL 1%
R7
C5
Ceramic 10NF
T2
BLF242
C10
Polyster 220nF
TOKO Green Inductor 5 1/2T
L2
Ceramic 150pF
Ceramic 22pF
C6
C8
Ceramic 22pF
FB1
FERITE BEAD
R4
10 Ohm/1 watts TOL 5%
VCC 24-28V
CON2
C11
100uF/63V ELECTROLYT CAPACITOR
C9
220nF Polystrene Capacitor
See Photomaster
Ceramic 82pF 500V
C14
C17
Ceramic 82pF 500V
L4
100nH ID=3mm, T=8, Cu wire=0.5mm
FB3
Ferroxcube wide band h.f choke, grade 3b
R8
10 Ohm/1 watts TOL 5%
R5
10 Ohm/1 watts TOL 5%
FB2
Ferroxcube wide band h.f choke, grade 3b
R6
47 Ohms / 0.5watts
C13
2.2uF/50V
Fan 24V
FAN CON.
C12
Polyster 220nF
L3
TOKO Orange Inductor 2 1/2T
BLF147
See Photomaster
C19
Metalclad Capacitor 33pF
ID=6mm, T=3, AWG=1mm
T1
BLW77/SD1407
C20
Metalclad Capacitor 33pF
L6
ID=10mm, T=5, AWG=1mm
L7
C21
Metalclad Capacitor 33pF
C22
Metalclad Capacitor 33pF
C23
10nF Ceramic
C24
10nF
RF OUT
150 WATTS