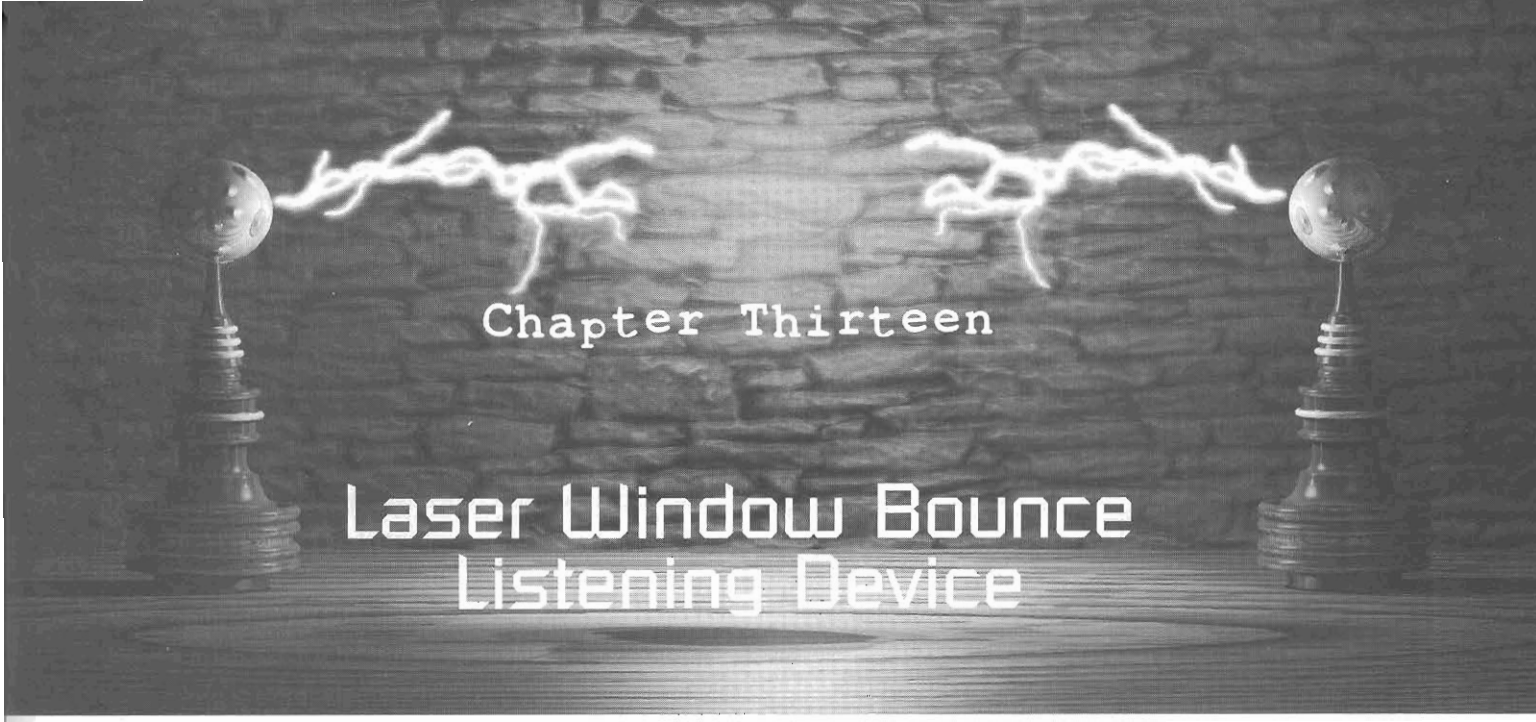

Chapter Thirteen

Laser Window Bounce Listening Device

This chapter offers an excellent demonstration in which a laser illuminates a window or another reflecting surface and is then reflected back to a specialized optical receiver. Information is retrieved from the window laser as a result of vibrations on the reflecting surface. This device (see Figure 13-1) makes many potential tasks possible from a safe distance, such as surveillance or monitoring radioactive pipes in reactors, high-voltage insulators, and other objects in hostile environments.

Complete detail on the construction of the required electronic modules is provided in this chapter, allowing you to set up and demonstrate the concept without a precision machined optical housing lab. This approach is excellent for science projects, and a sample housing is shown for those wanting to build a medium-performance field-usable device lab.

Expect to spend around $100 for the basic parts. Most are readily available, whereas specialized parts are available through Information Unlimited at www.amazing1.com. The parts for the laser transmitter and receiver are listed in Tables 13-1 and 13-2.

Special Note

The builder must realize that using a system for acoustical surveillance could violate Federal Law #90-352 (which states that it is illegal to covertly

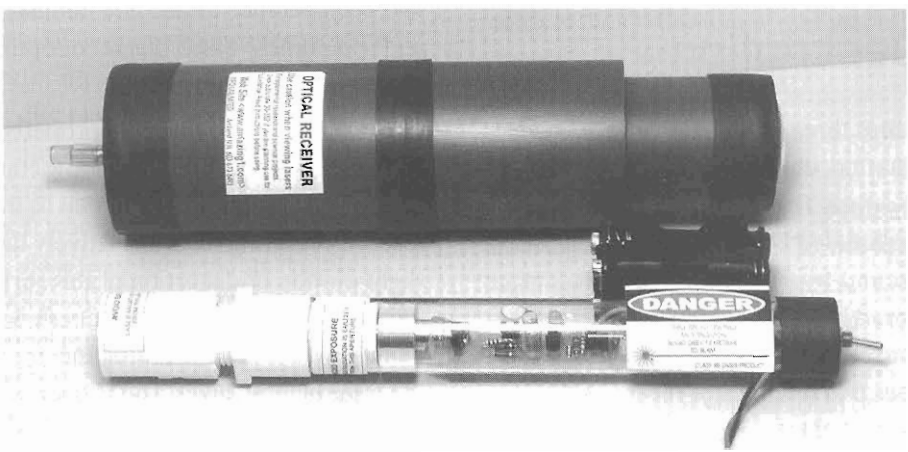

Figure 13-1 *Laser bounce listening system*

listen to a conversation without permission from one of the parties) and may also be in further violation of certain state and local laws. Remember that you need permission from one of the parties being listened to. Our advice on this point is when in doubt, consult your state attorney general as to your bottom-line objective. Using the device for a science fair project, research and development, or individual experimenting usually is not a legal issue.

Basic Theory

This project shows how to interface any optical laser and a sensitive light with a sound detector/receiver to create a system capable of listening to vibrations from a laser-illuminated reflecting surface. This device makes it feasible to listen to mechanical abnormalities of moving machinery, dangerous bursting pipes, volcanic activity, high-voltage insulator failures, and nuclear reactors, all from a safe distance. Monitoring and acoustically listening to a certain premises without ever illegally entering, as would be necessary for purposes of installing a bug or a similar device, now are possible. The principle is sound, but to achieve optimum results it may sometimes be difficult due to the many variables often encountered. These variables strongly depend on the optical and mechanical properties of the reflecting surface, the positioning of the *laser transmitter* relative to the *laser receiver*, and the quality of the target sounds in intensity, wavelength, and background interference.

Project Description

Your system requires three parts: *the laser transmitter* for surface illumination, the *laser receiver*, and the *sound-to-optical surface*. The laser transmitter projects a coherent, collimated beam of light that is reflected off the sound-to-optical surface. This reflected or scattered light is detected by the laser receiver and is converted into sound through a headset. The system uses two methods of receiving the reflected or scattered light.

The *direct reflection* (DR) method is where the laser transmitter and receiver are at two defined locations dictated by Snell's Law, which states that the angle of reflection equals the angle of incidence in all planes. This approach can be cumbersome and is limited due to positioning problems, as both the transmitter and receiver must be optically aligned in both the horizontal and vertical planes. It does provide a maximum range of operation. The DR method provides a high level of signal that may require optically attenuating with polarized filters. A shortcut for demo purposes is to use a reflective surface such as a mirror or window pane, and position it for proper alignment. This surface can be secured using your own ingenuity.

The preferred method is the *scattered reflections* mode, using the signal provided by the light from where the laser hits the surface. This is the spot you usually see at any relative position and is many times weaker than the DR, but it reduces the problem of positioning. The laser transmitter and receiver can be mounted on the same frame but must be aligned so both may view the target point. Obviously, large optical lenses on the receiver and a higher-power laser with a collimator can greatly enhance this method by collecting and providing more light for the signal.

All systems use our laser light receiver, utilizing a "light-biased" phototransistor for operation at low light signal levels. A voice enhancement bandpass filter limits high- and low-frequency sounds, further utilizing performance.

The surface of reflection plays a major role in performance, as well as the actual position of the laser spot. Double- and triple-glazed windows further complicate the situation. We can only suggest patience and perseverance to become familiar with the tricks and sometimes "black magic" of optimizing the performance of this system.

You will notice a peculiar property of the reflected laser light, such as from a window containing interference bands. This is primarily due to the phase interference occurring from a relatively flat surface. A slight motion or distortion of this surface will cause these interference bands to vary in position. This quality we use in modulating the phototransistor of the laser light receiver. The proper position of the phototransistor relative to its view of these bands can

be a very sensitive adjustment. A slight change can cause a tremendous difference in reception.

You will note that it is *not* necessary to view the beam at an exact right angle to the reflection surface. Any reasonably acute angle will produce the interference bands since they are a function of the differential flatness of the reflecting surface. The detector wants to view the interface of these interference bands for optimizing performance. The importance of good, sturdy tripods for the system cannot be overstressed.

An ideal condition for testing is to position both the laser transmitter and the laser receiver so that the reflected beam has a small angle or the reflected path is near that of the incident path. This might be difficult in actual use because you have two planes (azimuth and elevation) to deal with. It is suggested when experimenting to attempt to position the "test" reflecting or vibrating surface to fine-tune these nearly coincidental axes.

Project Construction

The project is divided into three sections consisting of the laser transmitter, the laser receiver, and the completed assembly.

Laser Transmitter

First, a little laser theory. "Laser" is an acronym for *light amplification by stimulated emission of radiation.* Visible lasers are used in many applications, including gun sites, pointers, printers, construction and surveying aids, compact disc players, barcode readers, light shows, and many others. The helium-neon gas laser is one of the most familiar types, with its bright red directional beam. It's been a workhorse for years despite its fragile glass laser tube and its requirements for costly high-voltage power supplies. Infrared diode lasers are used in telemetry, security detection, night vision, robotics, covert target designation, and laser bounce surveillance.

The recently developed laser diodes emit coherent laser light in the visible and invisible spectrum, and do not require a high-voltage power supply. Because they're small, low cost, and fairly rugged, laser diodes are well suited for many new applications.

Before reviewing some basic laser theory, we must first talk about regular light for a minute. When you turn on a lightbulb, light energy is emitted in what is referred to as a spontaneous form. It is an integration of many individual atomic-energy-level changes, each producing its own little "packet" or photon of light energy, with each photon having a particular phase and frequency. In the case of a lightbulb, electrical energy "pumps" the filament electrons to higher than normal atomic energy levels shown in the 13-2a section of Figure 13-2.

Photons are emitted when the electrons return to their initial states and give up that energy in the form of light. The frequency of the light is dependent on the difference between the previously excited and the normal energy-level states: the larger the difference in energy levels, the lower the wavelength of light. The light produced by the process of spontaneous emission is incoherent or random, as shown in the 13-2b section of Figure 13-2.

Unlike spontaneous emission, laser light is highly directional. The radiant energy is released in steps, or in synchronism, resulting in coherent, reinforced light where all the waves are in phase. In other words, all the rays are parallel and at the same wavelength. This requires that the number of excited atoms in the higher energy state exceeds that of the initial or rest state. This condition, referred to as *population inversion*, normally doesn't occur in nature and must be "forced."

Given a population inversion, each energized atom is then "stimulated" to return to its lower energy state by the emission energy or the incident light of an adjacent atom, as shown in 13-2c. The result is coherent lightwaves, as shown in 13-2d. An optical cavity with mirrored ends is usually necessary to provide the right amount of stimulated energy for laser light. As shown in 13-2e, the light is reflected back and forth within its confines until it is a powerful beam that is allowed to exit the cavity as useful laser light energy.

A laser diode is similar to an ordinary *light-emitting diode* (LED) in that both are composed of a semiconductor PN junction, as shown in Figure 13-2f.

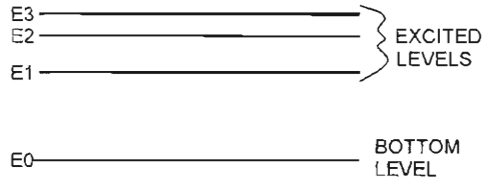

Fig 13-2a Light is the result of radiation produced within an individual atom by an electron being "pumped" to a higher than normal energy level by an external energy source.

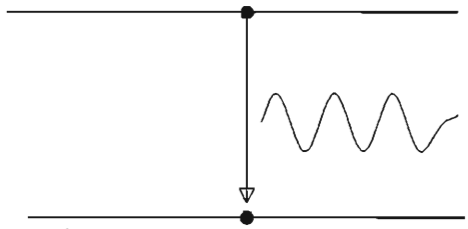

Fig 13-2b A lightbulb emits "spontaneous" light that does not allow the energy packets to reinforce one another in phase or position.

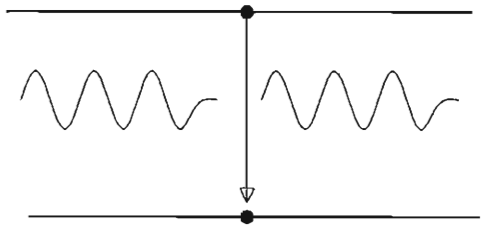

Fig 13-2c When more excited atoms exist in the higher-energy state than in the initial or rest state, each energized atom is "stimulated" to return to its lower-energy state by the emission energy, or incident light of an adjacent atom.

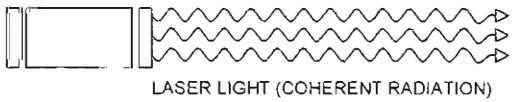

Fig 13-2d A laser beam is the result of an "in lockstep" train of coherent lightwaves.

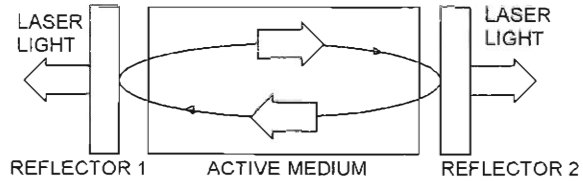

Fig 13-2e An optical cavity having mirrored ends provides the right amount of stimulated energy for laser light. Light is reflected back and forth within its confines until it is a powerful beam that is allowed to exit the cavity as useful laser radiation.

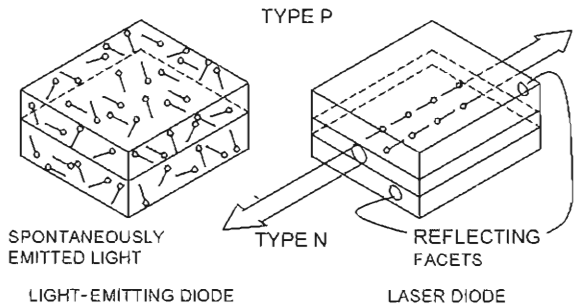

Fig 13-2f A laser diode is similiar to an ordinary LED except that the LED produces spontaneous light, while the laser emits light by stimulated emission where the wavelengths and temporal relation are coherent. A laser diode also contains two reflecting mirrors that form a cavity and permit the emitted light to be highly directional.

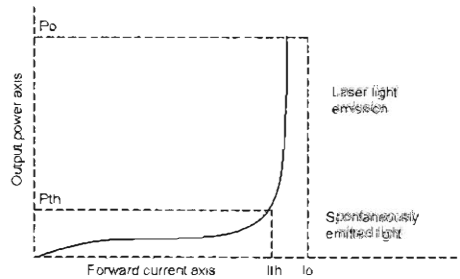

Fig 13-2g A laser diode operates similarly to a forward-biased diode. The vertical axis corresponds to optical output while the horizontal axis is the forward diode current. Io is the operating current, and anything below Ith will produce the effects of an LED.

Figure 13-2 *Laser diode theory*

An electrical potential causes a flow of holes and electrons that, upon recombination, emit light. The LED produces spontaneous light, whereas the laser emits light by stimulated emission. The laser diode also contains two reflecting mirrors that form what's called a Fabry Perot cavity and permit the emitted light to be highly directional, an important laser property. The 13-2g section of Figure 13-2 shows the characteristic diode curve showing the slope sensitivity of the device.

In spite of a laser diode's apparent physical ruggedness, it is very sensitive to temperature

changes, electrical transients, and operating-current parameters. It is totally unforgiving of errors, so our circuitry and construction techniques must take that into consideration. The curve shows a steep slope where laser operation takes place and the input-current "window" on the horizontal axis is very narrow; consequently, the driver circuit must operate within those limits or you'll end up with one of the world's most expensive medium-powered LEDs.

It is possible in certain cases to cool your laser diode down to a low temperature and obtain more output. Caution is advised for two reasons: You may damage the diode's built-in optics and you may exceed the laser classification rating.

The laser in this circuit uses a diode that can produce up to 10 milliwatts of optical power at a wavelength of 880 nanometers. The output level must be kept to fewer than 5 milliwatts to comply with safety issues when using this application.

Circuit

The schematic of the handheld laser is shown in Figure 13-3. The laser diode (LD1) is actually an assembly that contains a laser-emitting section (LD) and a photodiode section (PD). The photodiode enables the circuit to monitor the laser diode's output and produce the feedback necessary to control the circuit and protect the diode from excess drive current.

The laser diode is connected in series with current-limiting resistors R3 and R4 and the collector of transistor Q2. The current through Q2 is controlled by transistor Q1. The zener diode (Z1) maintains the

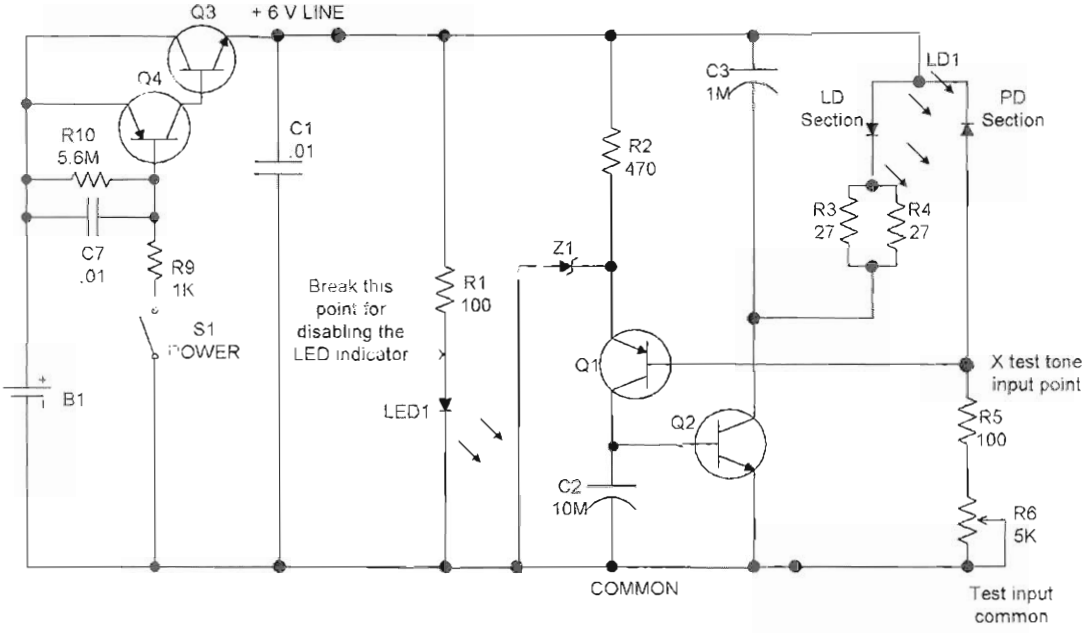

Note 1 Laser output power may be controlled to some extent by physical pressure to contact probes connected in place of S1 switch

Note 2 Do not adjust R6 to limits as the resistance jump could damage the laser diode.

Note 3 Power to the module is shown using a 6-volt battery pack of 4 AA cells. You may use any clean source of 6 volts, providing it can deliver a current of 150 ma without a voltage drop. Use caution when setting the power on weak batteries as when new ones are replaced the laser may be overpowered.

Note 4 The test tone oscillator and voice modulator are connected to the points shown across R5,6. A separate battery of 9 volts is recommended for power to these external circuits. Connecting wires to these circuits are twisted and routed out through rear cap CAP1.

Figure 13-3 *Laser schematic*

voltage across Q1, and resistor R2 limits the zener current. The collector current of Q1, also the base current of Q2, is controlled by its own base, which is connected across resistors R5 and R6. Current through the photo diode PD develops a voltage across these resistors that is proportional to the optical output energy and constitutes the feedback required for output stabilization. Increased output causes Q1 to conduct less base current to Q2, resulting in less laser diode current. Potentiometer R6 presets the value of the quiescent current. Capacitors C2 and C3 limit transients at the base of Q2, whereas capacitor C1 limits them from the 6-volt line. The system turns on when transistor Q3 starts to conduct and eventually reaches saturation.

The leads to switch S1 may be touch-control electrodes consisting of small pieces of metallic tape that, when bridged by finger contact, cause a small amount of base current to flow into transistor Q4. The collector current of Q4 flows into the base of Q3, causing it to saturate and supply current to the laser diode circuitry. The base current to Q4 is limited by resistors R9 where R10 and capacitor C7 reduce the circuit's sensitivity to stray AC or static fields that could cause premature activation. This scheme would only be used in certain applications and may be eliminated by a simple switch.

The laser is powered by four external AA batteries or any convenient source of 6 volts. S1 controls the power to the circuit and may be a key switch, push button, toggle, or slider switch rated at .5 amps. LED1 is intended for emission indication, and resistor R1 controls the diode current.

Construction of the Electronics Assembly Board

To construct the board, follow these steps:

1. Identify all the parts and pieces and verify them with the bill of materials.
2. Insert the components, starting from one end of the circuit board, and follow the locations shown in Figure 13-4. If you are using a perforated vector board, it is a good idea to trial-fit the larger parts before actually starting to solder. Always avoid bare wire bridges, messy solder joints, and potential solder shorts. A *printed circuit board* (PCB) is available for this project.
3. Check for cold or loose solder joints. Pay attention to the polarity of the capacitors with polarity signs and all the semiconductors.
4. Carefully solder the bus wire extension pieces to the laser socket as shown in Figure 13-5. The socket must abut to the top side of the assembly board when soldered in place. It is suggested that the socket be secured in place using *room temperature vulcanizing* (RTV) silicon rubber when the proper assembly is verified.
5. Solder two 6-inch switch leads and a CL1 battery clip to the assembly board. You may also connect leads to the optional test-tone circuit if building the laser for window bounce experiments. Note the dual connections to pins 1 and 3. These are the anode of the diode laser and the cathode of the monitor diode.

Assembly Is Ready for Pretest

Do not install the laser diode in the circuit at this time. The circuit must be checked and calibrated beforehand. To test the construction, follow these steps:

1. Make sure that the batteries are at full capacity before you proceed with the following. Check on the lowest meter range; any current flowing into the circuit above a fraction of a micro-amp with the system off will cause premature discharging of the batteries. Check for defective components, flux paths, excessive moisture, and so on if any current reading is detected in this step.
2. Set up a meter in series with one of the battery leads to monitor the system current in the range of 10 to 250 milliamperes.
3. Temporarily unsolder the LED from R1. Short the switch leads together and measure a current of approximately 15 milliamperes. Bridge R1 to the LED and note the current going to 40 milliamperes and the LED lighting. Still

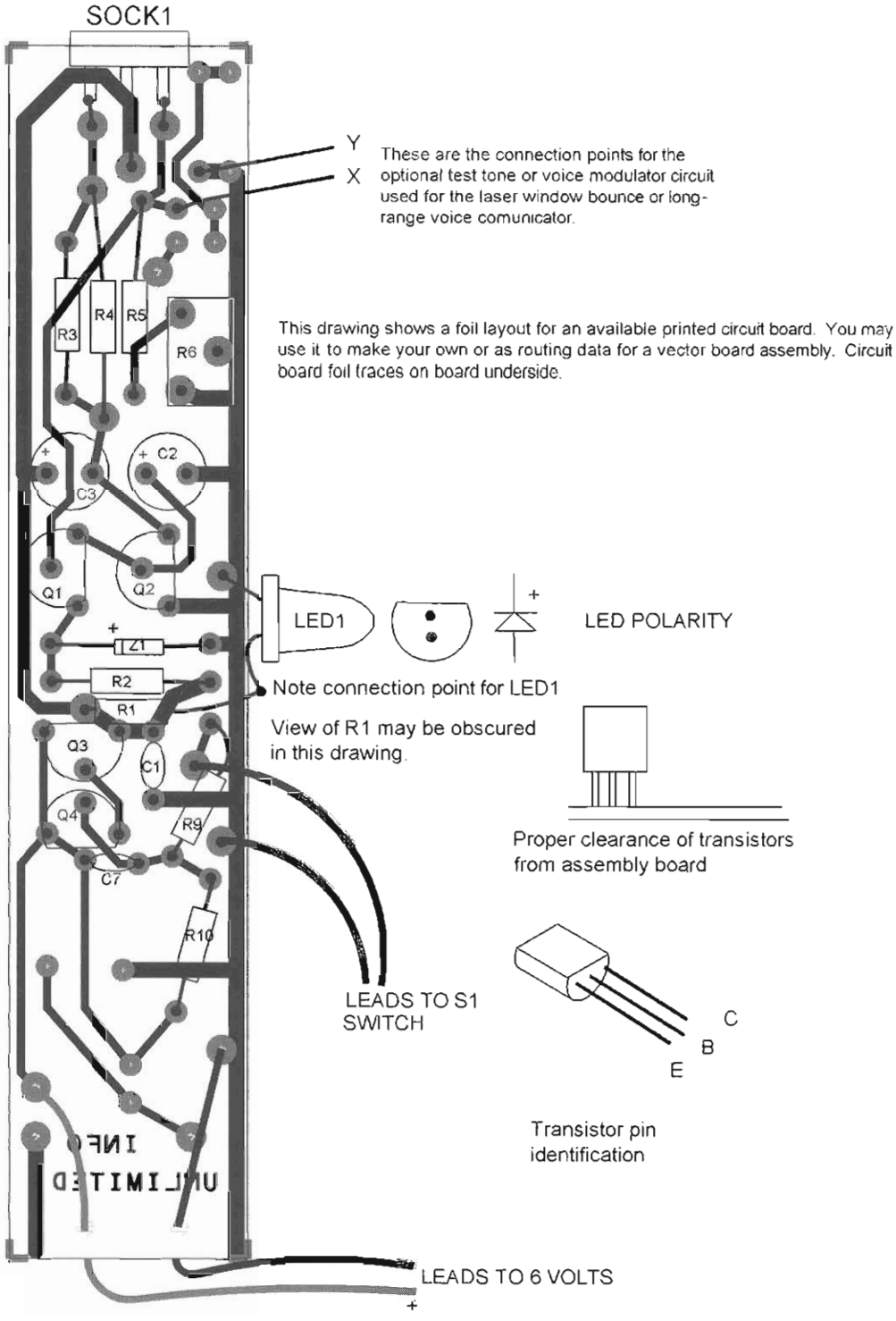

Figure 13-4 *Assembly circuit board*

leave it disconnected. This verifies the LED1 lighting necessary for emission indication.

4. Obtain a 1N4001 diode and connect it in place of the LD laser diode section of LD1. You can connect the anode to the 6-volt line and the cathode end to the junction of the R3 four-socket end. Rotate R6 to full *counterclockwise* (CCW).

5. Turn the system on and note the input current going to 250 milliamperes. Add a 10K resistor in place of the PD section of LD1 and note

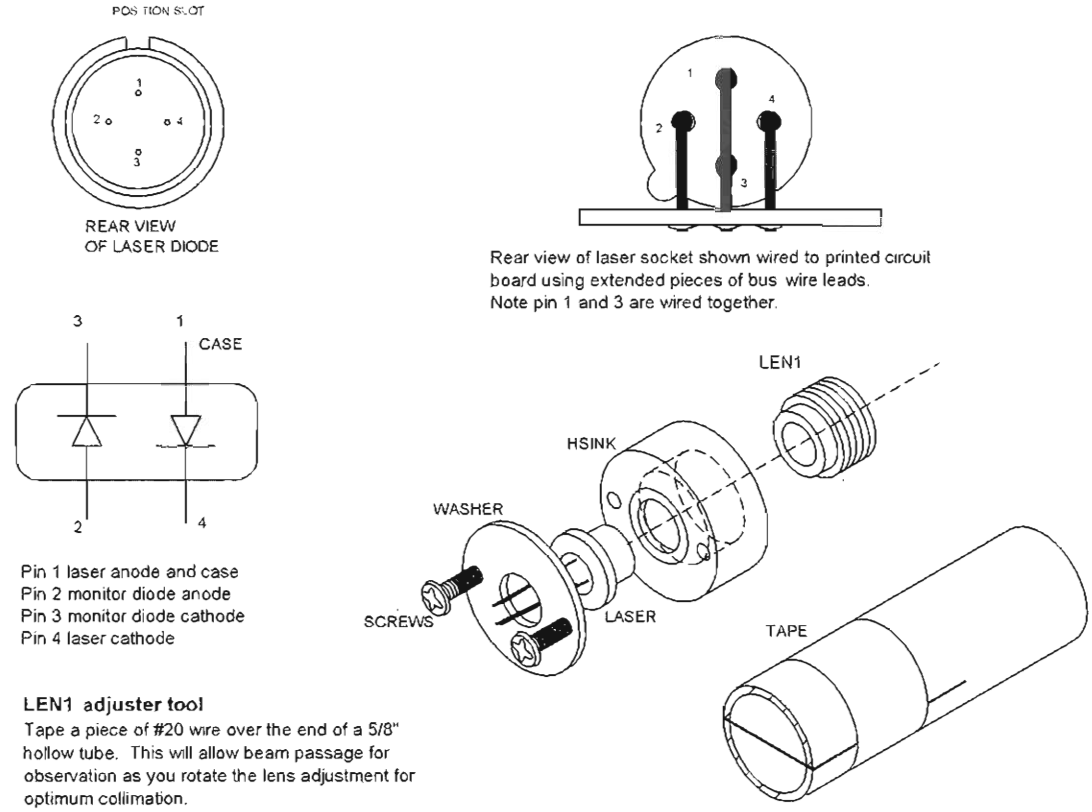

Figure 13-5 *Laser socket wiring for a separate diode and a diode with an integral collimator*

the input current dropping to around 15 milliamperes.

6. Rotate R6 through its range and note the input current varying between 15 and 250 milliamperes. This is *not* a linear control.

   Note that an integrated laser diode with optics (LASMOD1) is available as shown in Figure 13-5, making optical alignment simpler.

7. Assemble the laser diode to the heat sink, as shown in Figure 13-5, and very carefully install the laser diode into the socket. Observe the position slot shown. Verify that R6 is fully CCW. Apply power and carefully adjust the input current to 100 milliamperes. The diode should be producing around 2 milliwatts of output and is detectable using infrared-sensitive paper or a night vision device. Many video cameras will respond to this laser wavelength.

You can operate the diode up to 125 milliamperes and obtain almost 10 milliwatts of output. This will exceed the class 3a rating and the system must be labeled accordingly. Safety glasses must be used at this power level.

Once you set the desired power level, you can reconnect LED1, noting that it draws 20 milliamperes of additional current. The optional test-tone or voice modulator can be connected and will be clearly heard when used with the optical detector by just picking up the scatter. Note these optional circuits can operate up to 12 VDC.

The output of this laser is also an excellent invisible illumination source for starlight night vision scopes, allowing long-range viewing in total darkness.

At this point you should have a fully functional board-level laser system capable of producing up to 10 milliwatts of optical output power at 820 nanometers. The laser must now be housed or contained in a suitable enclosure dependent on its application.

Special Note

Unfortunately, the output of this system is in the infrared range and is invisible to the naked eye as the radiation is at 820 nanometers and appears as a dull, red glow. The actual viewing of the laser energy will require a night vision device. Many video cameras will pick up this radiation.

Lumitek supplies infrared sensor paper that will glow, indicating the beam profile. It is available on their web site at lumintek.com. Look for Q11 sensor paper or sticks.

Final Enclosure and Optics

Insert the small lens (LEN1) with the small, plastic-threaded retainer into the heat sink, as shown in Figure 13-5. If your heat sink is threaded, simply screw it in until it bottoms out. If it is not threaded, you must shim up the assembly with some thin tape until it fits into the heat sink reasonably securely. Adjustment is much simpler using the threaded heat sink as you simply screw it into the right position to obtain the smallest far-field beam profile as indicated by the detection equipment used. The unthreaded version will require trial-and-error positioning of the lens to achieve the correct position. This can be very cumbersome and requires patience and perseverance to find the optimum position. The objective is to obtain the minimum beam divergence at far field (several meters).

Fabrication

Fabricate the enclosure tube (EN1) from a 1- × 1/16 - × 7-inch polycarbonate tube, as shown in Figure 13-6. We use clear tube to enhance the science project approach, showing the innards.

Create the lens tube (LTUB1) from a .835- OD × .6- × 2-inch schedule 40 *polyvinyl chloride* (PVC) tube. Note these are the nominal dimensions for 1/2-inch PVC tubing. Insert a negative concave lens (LEN2) into the LTUB1.

Make sure the lens is clean without fingerprints. Use a clean eraser on a pencil to position it. This should fit smoothly into this tube. PVC tubing can vary in dimension and you may have to shim or actually bore out the tube for proper fitting of this part.

Final Assembly

Finally, assemble the attaching lens (LEN3) to the fitting (ADJFEMALE) with glue as shown. Press the lens tube completely into the mating fitting (ADJMALE). The collimator assembly now fits into the enclosure tube. You may have to shim the LTUB1 section to obtain a secure fit.

The laser module fits inside the enclosure tube and is secured by a small nylon screw (SW1) mating to the clearance hole on the board. S1 is mounted to the rear cap (CAP1). A clearance hole for power adjust trimpot R6 must be drilled in the enclosure tube.

Now the ultimate trick is to get the two-lens separation distance approximately to 2 inches or where the best collimation occurs at the midrange of the threaded adjustment of the ADJMALE and FEMALE fittings. Once this is verified you can secure it using a forgiving adhesive such as RTV silicon rubber.

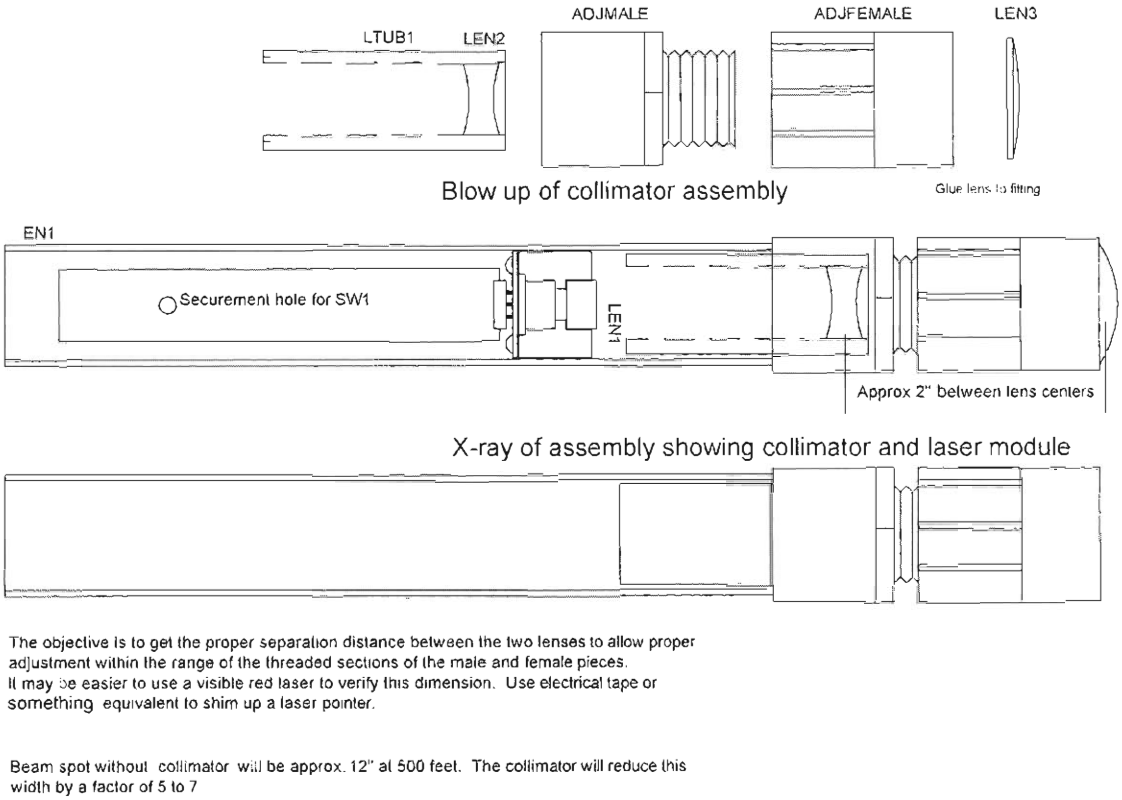

Figure 13-6 *Housing and collimator*

Experiment by checking the basic lens position in the heat sink and by resetting the collimation adjustment, noting the objective of obtaining minimal beam divergence at far field. You may also require an expanded beam for night viewing. The final assembly should resemble that shown in Figure 13-7.

Test-Tone Module Construction

To assemble the test-tone module, follow these steps:

1. Identify all parts and pieces and verify them with the bill of materials.
2. Insert the components, starting from one end of the perforated circuit board, and follow the locations shown later in Figure 13-14, using the individual holes as guides. The board is cut 1 × 1.5 × .1.

   Use the leads of the actual components as the connection runs. These are indicated by the dashed lines. It is a good idea to trial-fit the larger parts before actually starting to solder.

   Always avoid bare wire bridges, sloppy solder joints, and potential solder shorts. Check for cold or loose solder joints.

   Pay attention to the polarity of the capacitors with polarity signs and all the semiconductors.
3. Cut, strip, and tin the wire leads for connecting to the diode laser module points X and Y. These should be #24 leads to fit into the hole pads of the laser module.
4. Connect a scope across output X and Y and connect a 9-volt battery to the CL1 snap clip. Note the circuit draws 10 milliamperes when activated.
5. Turn on S1 and note a 1,000 to 1,500 Hz test tone of 2 volts peak.
6. Connect the output leads to the laser board, as shown at points X and Y. Preset the laser diode current to 100 milliamperes as directed. Aim the laser at a light-colored surface. You

CAUTION: Viewing of laser beam or direct reflections require the use of protective eyewear available through KENTEK in N.H. tel# 1 603 435 7201

Note that collimator will expand the beam at near field but greatly reduce it at far field. LEN1 basic lens in heatsink may require beam adjustment over time using a special tool.

Instructions:

1. Note switch is off and insert batteries.
2. Mount or secure laser assembly and point to target.
3. Power up by turning on S1. Note emission LED coming on
4. Adjust optics for desired effects.

Note that the collimator's adjustable piece is shown as the male part. This is a user preference. We prefer the female section with the flutes

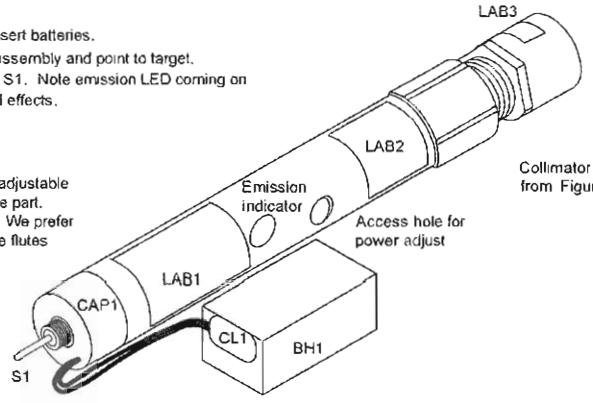

Collimator assembly from Figure 13-5

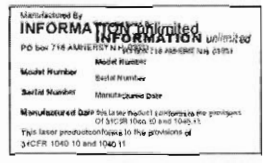

LAB1

LAB2

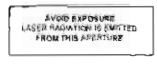

LAB3

Compliance tests

1. Verify correct labels as shown.
2. Key switch with nonremoval in off position.
3. Delay after key switch activation
4. Beam indicator LED indicates after delay.
5. Aperture cap included

Figure 13-7 *Final assembly view and labels*

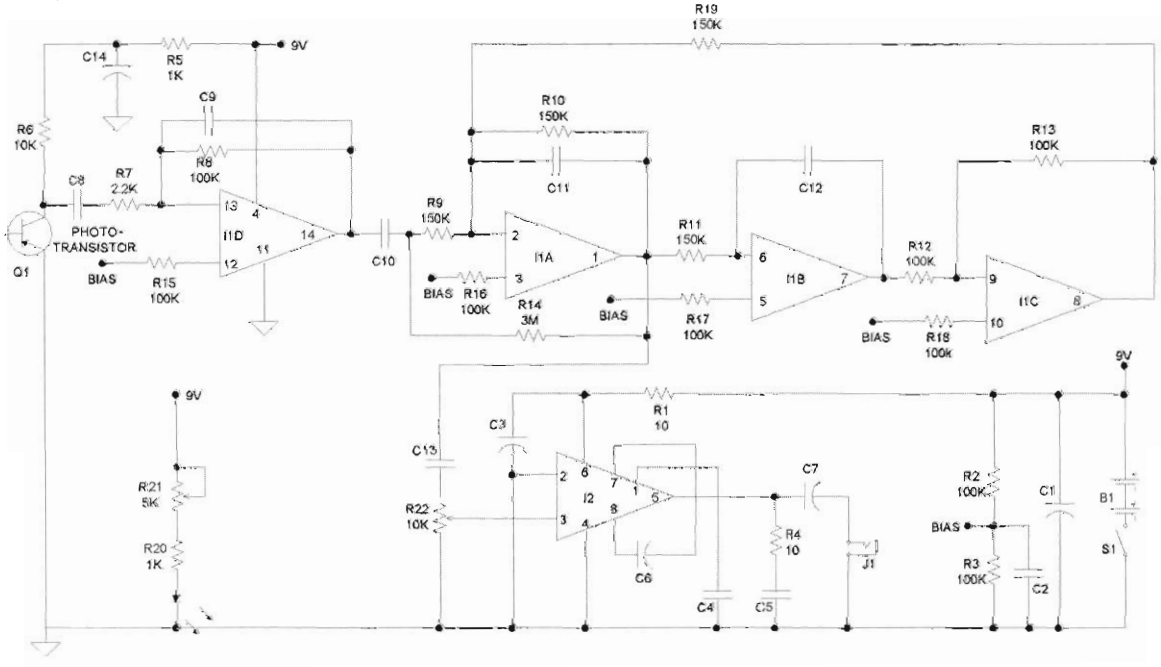

Figure 13-8 *Optional receiver schematic*

should clearly and loudly hear the test-tone signal when pointing the laser receiver in the direction of the scattered reflections.

Laser Receiver

This section shows how to construct the electro-optical receiver capable of detecting and reproducing the modulated information placed on optical beams of laser light energy. It also enables you to listen to any varying, periodic source of light, such as calculator displays, TV sets, normal lighting, the light produced from a fire, lightning, infrared sources, and of course intentionally modulated beams for voice or other analog communications. It functions as an excellent detector for this laser listening project by detecting the vibrations on a window or other similar surface when illuminated by laser light. These signals are clearly reproduced via a speaker or headset.

The device is housed in a round PVC enclosure that is easily mounted to a camera tripod when used for sensitive positioning applications. The gain control power switch and headphone jacks are mounted on the rear of the enclosure. A pistol grip configuration is suggested for pointing and listening to random sources.

Circuit Theory

Figure 13-8 shows the output from a sensitive phototransistor (Q1) amplified by a low noise amplifier (I1D) to a gain of 50. The output is pass-band filtered by voice filter I1ABC at 3-decibel rolloff points between 500 and 2,000 Hz. This provides maximum performance at most voice frequencies. The filtered output is further amplified to a usable level by IC2 for headsets or a small speaker. The J1 jack is connected to allow individual volume controls when using high-performance headsets (HS30). System gain is controlled via a pot and switch combination (R22/S1). S1 controls battery (B1) power to the circuit. A network consisting of resistors (R2 and R3) provides the necessary midpoint biasing for I1ABCD.

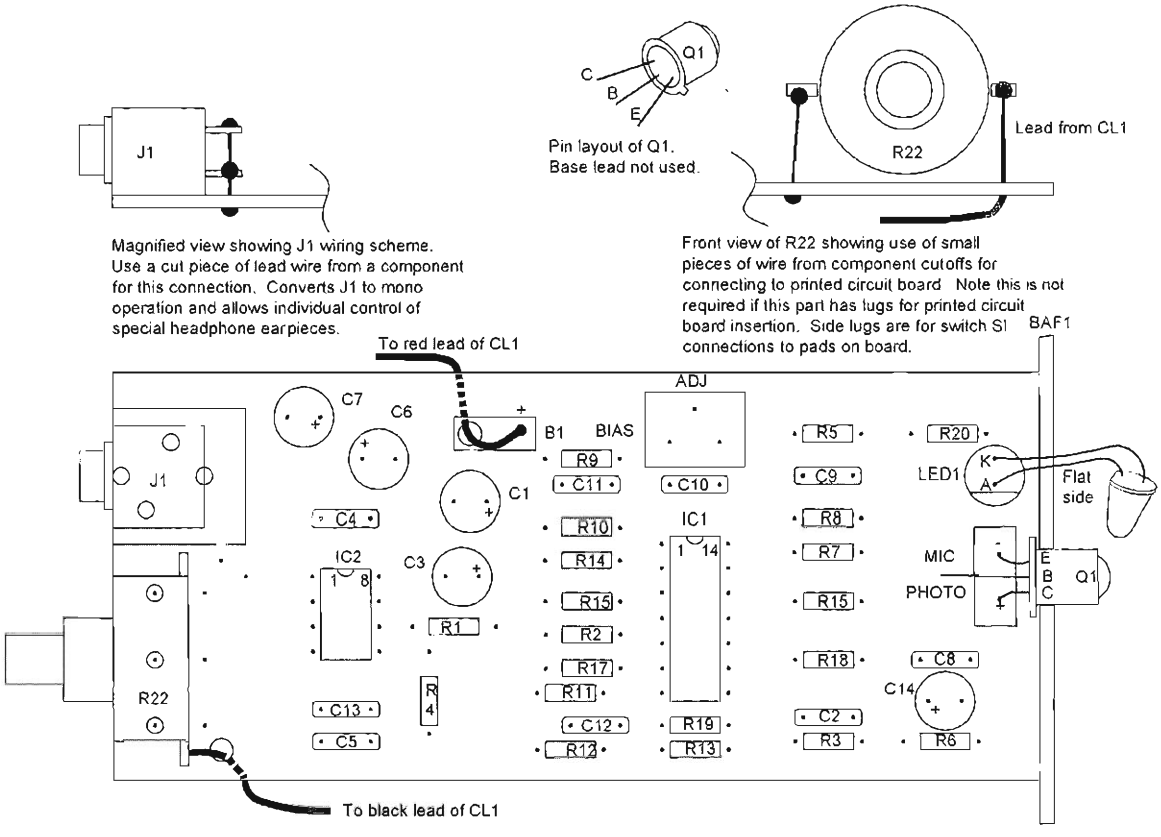

Figure 13-9 *Optical receiver assembly board*

A special circuit consisting of LED1 provides a light bias to phototransistor Q1. This is especially useful in a low light signal condition when viewing the scattered reflection mode of operation. Resistor biasing Q1 creates bothersome noise, limiting the full performance of the system. Trimpot R21 controls the emission output of LED1 and must be carefully adjusted in final testing for optimum effect.

Construction Steps

To build the laser receiver, follow these steps:

1. Lay out and identify all the parts and pieces with the parts list—note the color identification on the resistors. Capacitors are easily identified by markings with alternative value codes in parentheses. Assembly is shown on a PCB with a foil layout, as shown in this data. Construction may be on a vector board if layout is followed.
2. Insert the resistors as shown in Figure 13-9. Start with R1 and progress until all the resistors are mounted. Solder and clip off the excess leads. It is important to avoid solder bridges, shorts, and cold solder joints. Figure 13-10 shows the foil traces on the underside of the PCB for those wanting to etch their own.
3. Repeat with capacitors, observing the polarity of C1, C3, C6, C7, and C14.
4. Insert I1 and I2: note the position marks.
5. Insert Q1 phototransistor. Note the polarity as shown in Figure 13-7.
6. Insert B21, R22, and J1. Solder in place.
7. Connect the CL1 battery clip. Note the color-coded leads and dedicated strain relief holes in the PCB.
8. Fabricate the baffle plate (BAF1), as shown in Figure 13-11. This piece is used to view the position of the reflected laser or focused light as gathered by the extender lens. It is necessary to position this light onto the lens of the phototransistor. The baffle should be small enough to slide into the enclosure tube without obstruction. Drill two small holes for the leads of LED1 and center the hole for the phototransistor. Insert the LED1 leads, observing the polarity through the holes, and solder in place. Note the leads must be as long as possible. Position LED1 off to the side relative to the Q1 phototransistor so the emission signal can obliquely be seen yet does not block out any signal along the optical axis. Position it as shown in Figure 13-12 and secure it to the PCB with an RTV adhesive or an equivalent.
9. Create SPCR1 from a 1½ - × 2-inch piece of plastic, cardboard, or any suitable resource. This piece is sandwiched between the battery and the bottom of the PC board for insulating

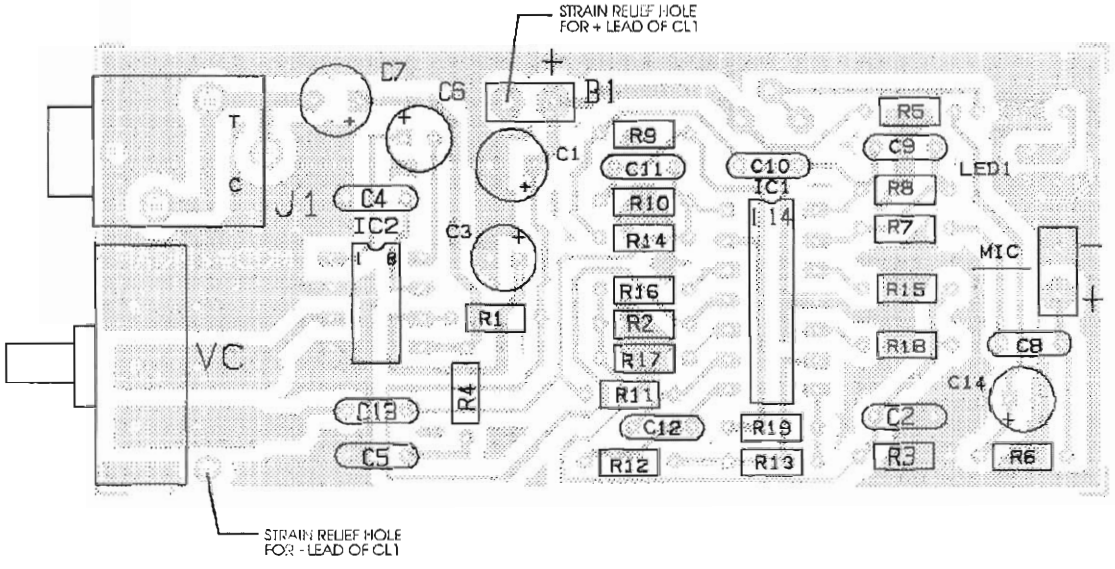

Figure 13-10 *Assembly board layout foil traces*

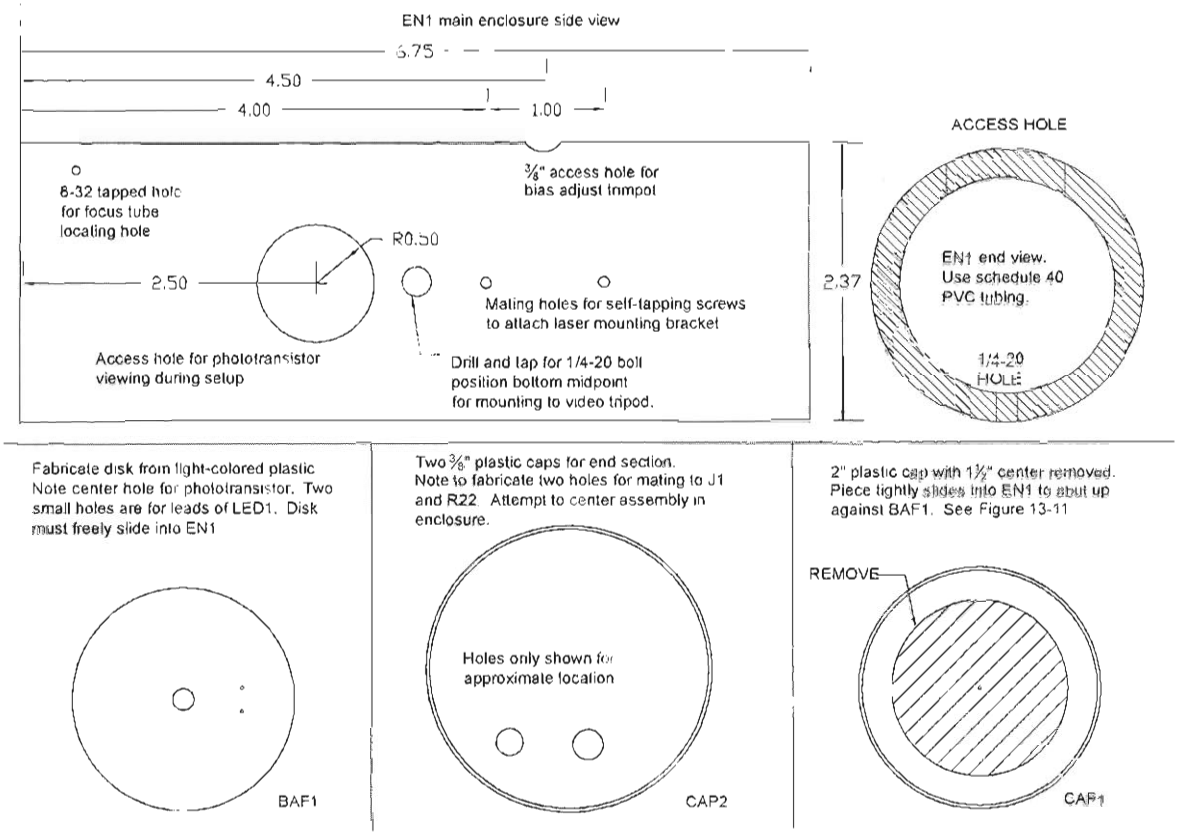

Figure 13-11 *Parts fabrication sketches*

purposes, as shown in Figure 13-12. The battery can simply be held in place with suitable elastic or an O-ring as shown. Create the collimator as shown in Figure 13-13.

10. Check all the wiring and the integrity of the solder points. Check for solder bridges and shorts on the assembly circuit board.

Unit Is Ready for Pretest

To test the unit out, follow these steps:

1. Connect a headset to J1 and clip in a 9-volt battery or connect to a suitable DC bench supply. Preset R21 FCCW. Click on R22/S1 and advance until a hum is heard in the headphones. Back off to a comfortable listening level. Note the hum is from the 60 Hz lighting.
2. Obtain a calculator with a clocked display and point unit to pick up the display emissions. Note a loud tone indicating signal pickup.
3. Verify the filter operation (which is not necessary unless circuit problems are encountered) by inserting a variable sine wave signal through an attenuator network across Q1. Preset the signal generator frequency to 1 kHz and turn up the level until a 1-volt peak-to-peak signal is measured via a scope connected across J1. Slowly vary the signal frequency and note the output response. The signal should start to roll off at 300 Hz with 3 kHz peaking in the center of these extremes. The battery current should read approximately 10 to 20 milliamperes with the headphones connected, detecting a normal signal.

Final Assembly

The final steps are as follows:

1. Fabricate EN1, CAP1, and CAP2, as shown in Figure 13-11.

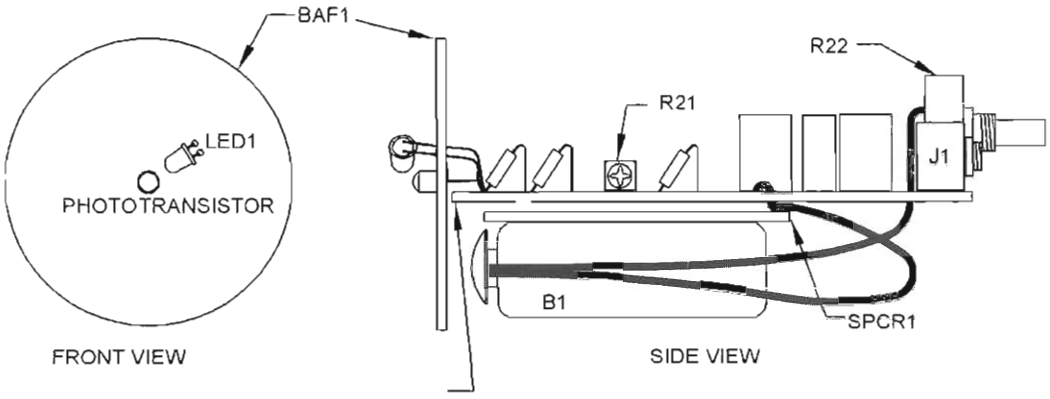

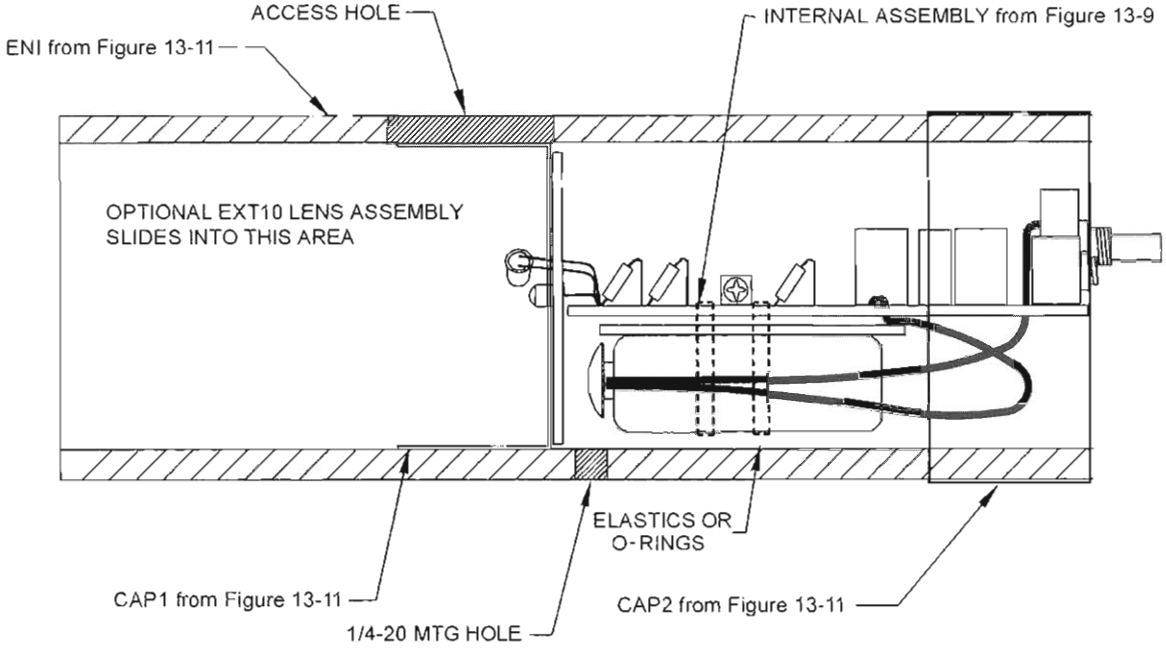

Figure 13-12 *Internal view of innards*

2. Assemble as shown in Figure 13-12. Note the positioning of CAP1. This keeps BAF1 in alignment.

Laser Receiver Is Ready for Final Testing

To conduct the final test, follow these steps;

1. Attach the unit to a video tripod via the 1/4-20 threaded hole.

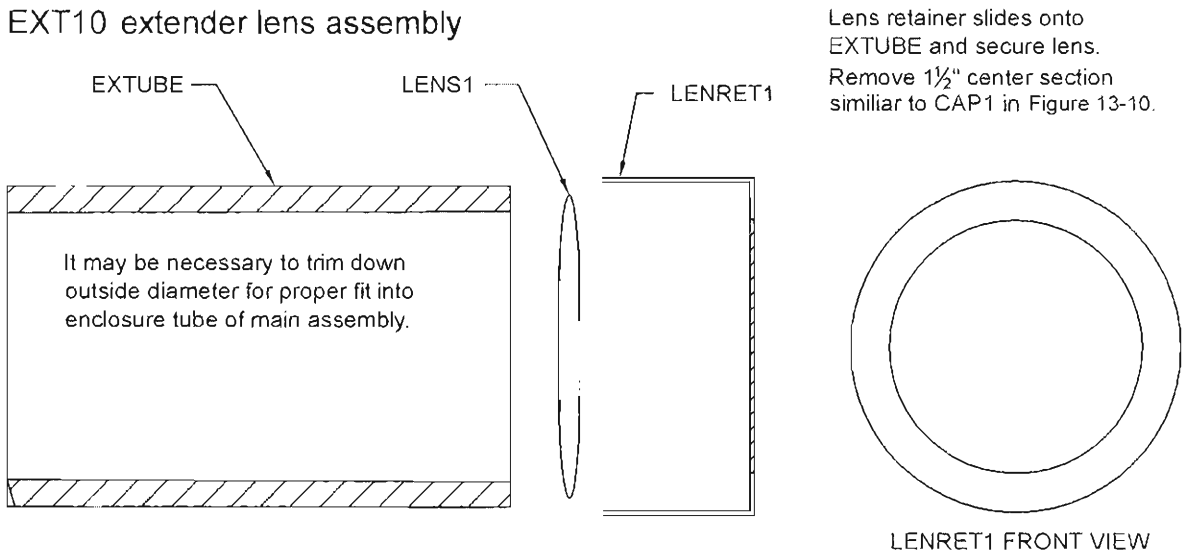

Figure 13-13 *Extender lens assembly*

2. Obtain a source of signal such as the clocked display of a hand calculator or a similar device. Note the liquid crystal will not work. Point the unit in the general direction of the display at a distance of 10 to 15 feet. Do not use the EXT10 lens at this time.
3. Allow for total darkness and attempt to obtain a signal by panning the tripod. Adjust the bias light control R21 for the best signal to background noise. Note the difference in low-level signal detection in total darkness *without* the bias light.
4. Experiment with the EXT10 lens at longer distances and appreciate the detection sensitivity of this device. Note that alignment may be difficult due to a narrow field of view.

System Application, Safety, and Legality

These fully working modules may be packaged by the builder into a compatible housing that will allow micro-mechanical adjustments. You can use a visible red laser module for short-range demonstration or sighting and alignment purposes. The illuminating laser transmitter must be precisely in alignment with the optical axis of the laser receiver and be mechanically fine-tuned via micrometer head screws to receive and process the scattered reflections. The laser transmitter described in this project uses the test-tone circuit that greatly simplifies rough optical alignment to a far-field surface. Output of the laser transmitter may be preset to 2 to 4 milliwatts for class 3a or at 8 to 10 milliwatts for class 3b. A collimator is included that greatly extends the potential range of the system. Optional use of the telephoto lens retrofitted to the optical receiver will greatly enhance distance and performance. The prebuilt modules may be set on tripods to verify performance integrity or for demonstration purposes before being enclosed.

The lasers used can be class 3a to class 3b visible or invisible. Protective eyewear is positively required in case you look into the direct reflection. Using the scattered reflection mode is less dangerous.

Get permission of those parties you are listening to! Experimental demonstration of this system should not pose a legal problem, nor should it be used for applications not involving oral interception.

Setup Using Direct Reflection

The direct reflection method requires the following steps:

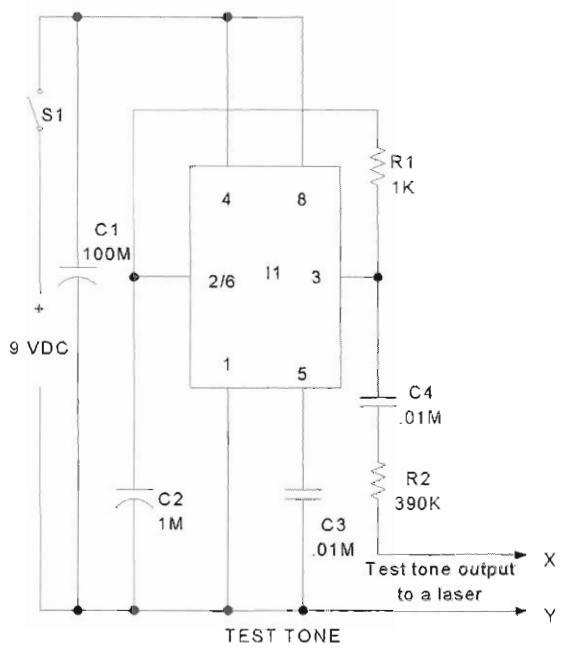

Bill of Materials

R1	1K 1/4 W	(BR-BLK-RED)
R2	(1)	390K 1/4 W (OR-WH-YEL)
C1	(1)	100 M / 25V vert electro capacitor
C2	(1)	1 M / 25V vert electro capacitor
C3,4	(2)	.01 M / 50V disc (103)
I1	(1)	555 DIP timer IC
S2	(1)	Slider SPDT switch
CL1	(1)	Battery snap clip
WR1	(30")	#24 vinyl hookup wire
PB1	(1)	1 X 1.5" .1 grid perf board

Assembly board layout

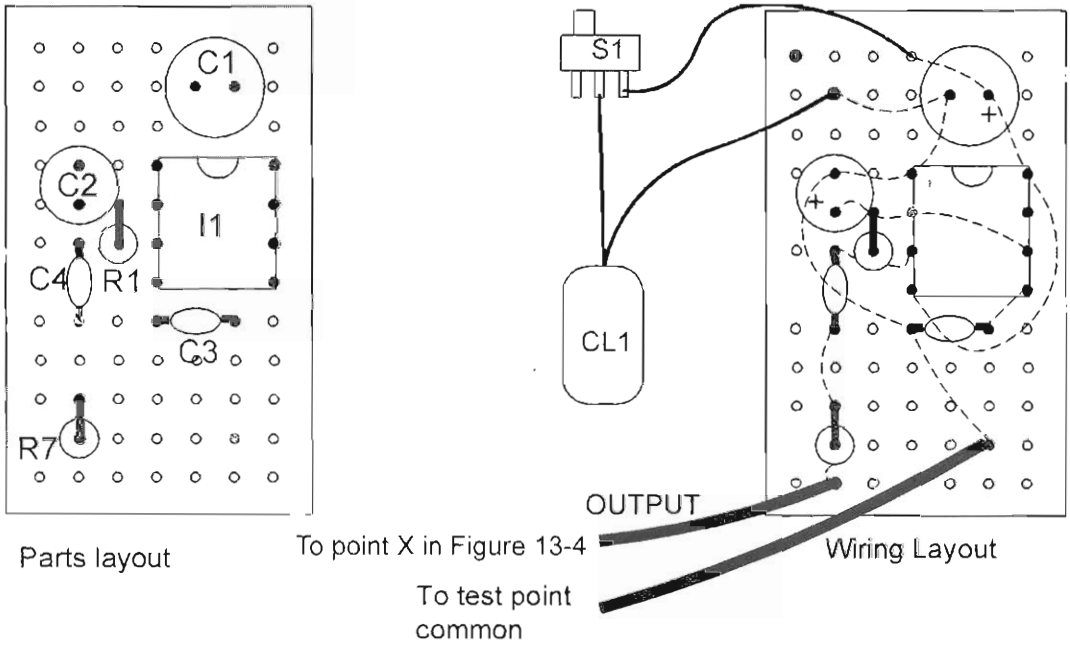

Figure 13-14 *Test-tone circuit*

1. Obtain two video camera tripods and secure the laser transmitter to one and the laser receiver to the other. Use duct tape, bungee cord, electrical tape, and your own ingenuity.
2. Remove the rear cover of the laser receiver and install a 9-volt battery into the clip.
3. Determine the target window. Select an easy one that is nearly "normal" and on the same

level where you are located. Place a loud radio on the opposite side of the window.

4. If your laser is a pointer or gun sight, it will be necessary to apply pressure to the trigger switch. This can be accomplished using a paper clip or clothespin to clamp the switch.

5. Position the laser transmitter tripod so the angle is as close as possible to the normal, reflected surface. This will allow minimal separation between the transmitter and receiver.

   Note that this is not necessary for proper performance but is easier until you are familiar with overall system alignment.

6. Locate the position of the reflected "laser spot" resulting from the direct reflection of the laser beam as it bounces back from the window. This will depend a lot on the relative position as in step 5, since the angle of reflection will equal the angle of incidence (Snell's Law).

7. Carefully adjust the positioning of the laser receiver so that it intercepts the spot from the direct reflection. The final position where the reflected signal is incident on the phototransistor as viewed through the view hole.

8. If you are using the extender focal lens, adjust it so that the reflected signal is about the size of a penny as viewed on the phototransistor and the white baffled disc. This lens is not necessary for ranges below 50 feet.

9. Turn the amplifier on via the control and adjust it to a comfortable audio level. Optimum results may require "tweaking" to an actual signal. A rough adjustment requires detecting a weak optical signal source in total darkness and adjusting for the best performance/noise figure. Note that the unit will not work correctly if not properly set.

10. Carefully adjust the position of the laser receiver for maximum clarity and volume. Note that only a slight adjustment can make a world of difference in performance. Experiment with the lens assembly when using ranges over 50 feet. Note the laser beam spot profile on the surface of the white baffle disc. You will see interference bands or fringes consisting of light and dark sections.

Note that clarity, volume, and general performance depend on many factors. The size of the window; the setting of the pane; and even the vibration picked up from window air conditioners, motors, pumps, oil burners, and so on can seriously degrade a usable signal.

Serious experimenters may want to interface the system with an audio equalizer to filter and enhance the usable signal. Again, experiment and experience is the best solution to quickly set up and obtain optimum performance.

A setup using the scattered reflection utilizes the light detected off the optical axis. The signal will be weaker over a given distance and will require more careful alignment.

You now have a choice of using the individual modules mounted on tripods for a demonstration of the concept and experiment. You may also choose to retrofit the modules within a sturdy housing similar to what is shown in the following data, providing a usable, field-worthy system of medium performance.

The objective is to allow an optical alignment between the laser impact point on the window and the return signal being coincident (coming back on same axis) to the optical axis of the receiver. Once this initial alignment is accomplished, it is only necessary to "tweak" the micro adjust screws that secure the laser optimizing the signal from any reasonable distance. It is assumed some signal is always detectable once initially aligned.

A test-tone signal modulates the laser at 1 to 2 kHz. This scheme provides easy access to aligning the optical axis. You now carefully search for the test tone, which is clearly detected with the optical receiver. Night vision equipment also can be an aid in initial alignment.

Mounting the laser in our test prototype involved floating it inside a stable housing, allowing several degrees of both vertical and horizontal adjustment for final "tweaking" using vernier adjust screws. The lens used on our prototype was from a low-cost video camera and screwed into a mating adapter plate firmly attached to the housing.

Obviously, a certain amount of mechanical ingenuity will be required in finalizing the system. The suggested assembly of this integrated system is shown in Figures 13-15, 13-16, and 13-17.

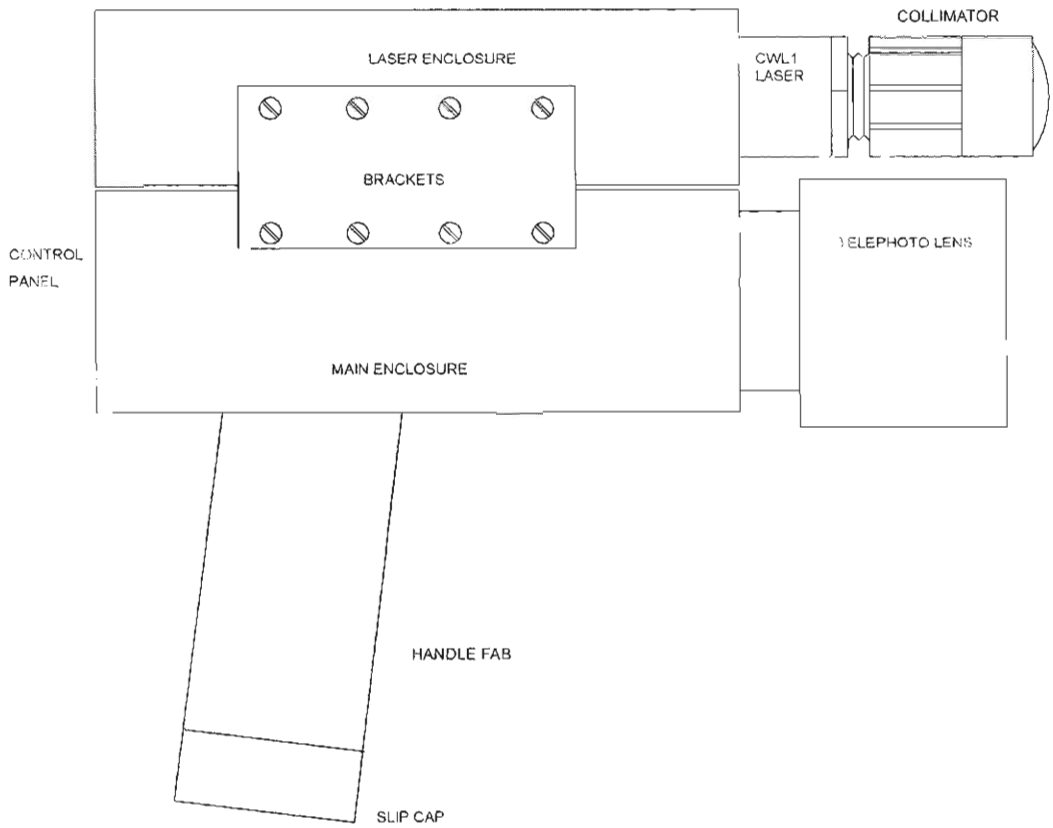

Figure 13-15 *Suggested system assembly—side view*

Exact dimensions are not given, as this might limit you due to the access of materials and the use of your own ingenuity. We show our approach to be used only as a guide that may be closely or partially followed.

Assembly of a Field-Worthy, Integrated System

The laser receiver innards are placed inside a sturdy housing and secured in place. An adapter fitting is secured to the exit end, allowing the fitting of your choice of telephoto lens. The laser transmitter is housed with a collimator and is secured to the laser receiver by two aluminum brackets.

This assembly requires good accuracy for maintaining close optical alignment, as any adjustment is via two micro-head adjusting screws for azimuth and elevation adjustments for fine-tuning.

You will note that the laser module is supported at its midsection by two rubber O-rings that provide a flexing motion both fore and aft. Compression springs are placed directly opposite the contact points of the micro-head adjusting screws. These springs load the position of the laser module beyond the optical alignment point and now require contact pressure of the micro head adjusting screws to adjust back into alignment against the spring pressure. The front points provide pivoting for elevation adjustments, whereas the rear points provide for the azimuth adjust.

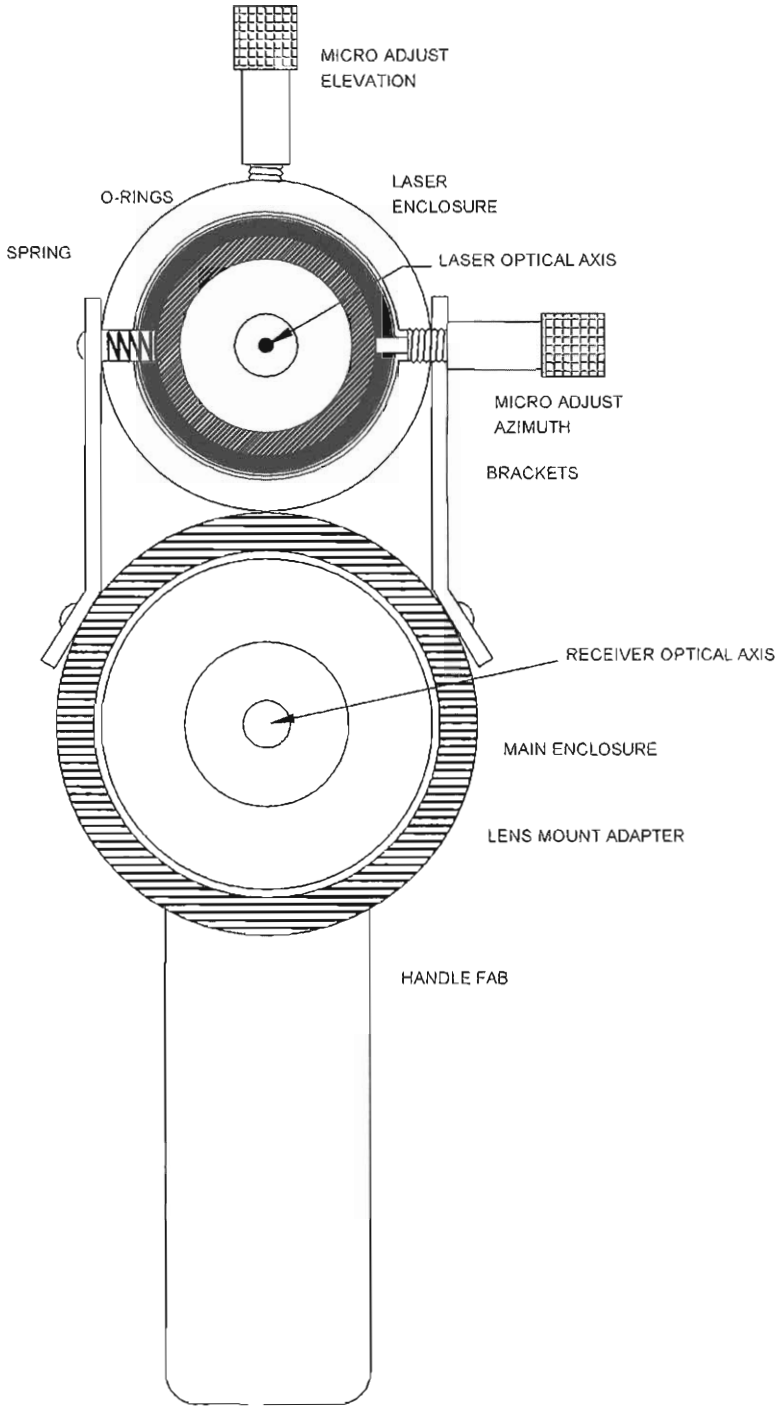

Figure 13-16 *Suggested system assembly—front view minus optics*

Parts and Fabrication Description

You must supply the following parts for final enclosure and assembly. Note that the recommended housing is aluminum tubing with at least a 1/4-inch wall thickness. Plastic PVC may be used for easier fabricating at the cost of mechanical stability.

- **Main enclosure** 2 3/8 OD × 1/4-inch wall aluminum tubing. Fabricate a hole for the press fit of the handle section. Note 1/4–20 holes for mounting to tripods.

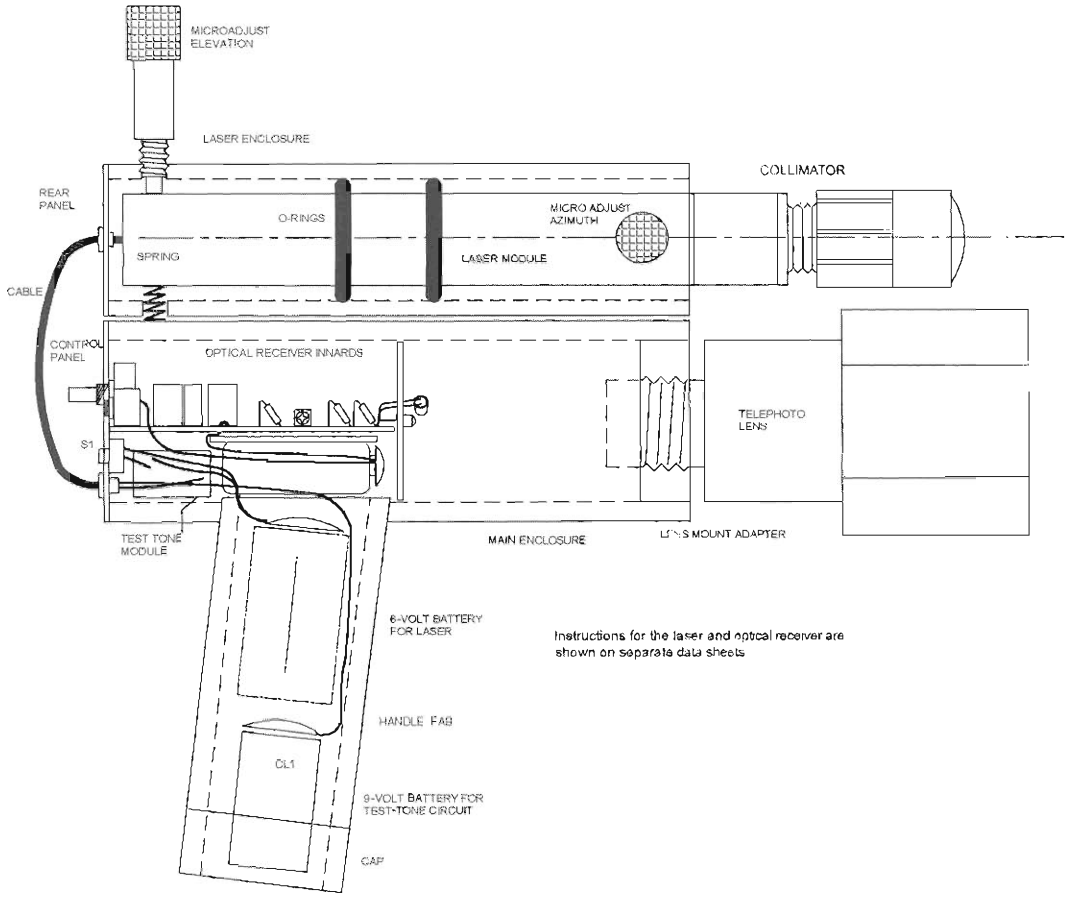

Figure 13-17 *Suggested system assembly—x-ray view of side*

- **Laser enclosure** 1¾ OD × ¼-inch wall aluminum tubing. Fabricate as shown for spring-retaining cutouts and holes for micro-adjusting verniers.
- **Handle** 1⅝-inch aluminum tubing for handle and battery enclosure.
- **Brackets** Fabricate two brackets for securing the laser and main enclosure together. It is important that this step be as precise as possible, as the two-enclosure axis must be parallel.
- **Control panel** You may use the front panel of the laser receiver module. Fabricate additional holes for the test-tone switch and feed-through bushing for the cable going to the laser section.
- **Rear panel** For the rear section of the laser enclosure with a hole for cable bushing.
- **Lens mount adapter** Fabricate for a ½-inch-thick piece of PVC to fit into the *innerdiameter* (ID) of the main enclosure tube. Cut out the center to mate with the telephoto lens of choice.
- **O-rings** For sleeving over the laser module and sandwiching with the laser enclosure tube. The position along the length may be adjusted for best movement using vernier adjusters. Experiment for best results.
- **Springs** Compression springs for maintaining a positive pressure against micro-adjusting vernier screws through their adjusting movement.
- **Micro-head adjusting screws** For precise elevation and azimuth positioning.
- **Cable** A multiconductor for 6-volt battery power and test-tone input to the laser module.
- **Switches** For power and test-tone control to the laser module.
- **6-volt battery** Uses a four AA battery pack for powering the laser module and is controlled by one of the switches.

- **9-volt battery** For powering the test-tone circuit.
- **Telephoto lens** An optional choice will greatly determine the potential range and performance of the system. Mates to the mount adapter.
- **Cap** Slip-on plastic cap for the retaining end of the handle.
- **Cushioned headset with individual volume controls**

Table 13-1 Laser receiver parts list

Ref. #	Qty.	Description	DB#
R1, 4	2	10-ohm, 1/4-watt resistor (brn-blk-blk)	
R2, 3, 8, 12, 13, 15, 16, 17, 18	9	100K, 1/4-watt resistor (brn-blk-yel)	
R5, 20	2	1K, 1/4-watt resistor (brn-blk-red)	
R6		10K, 1/4-watt resistor (brn-blk-or)	
R7		2.2K, 1/4-watt resistor (red-red-red)	
R9, 10, 11, 19	4	150K, 1/4-watt resistor (br-grn-yel)	
R14	1	3 meg, 1/4-watt resistor (or-blk-grn)	
R21		5K trimpot resistor	
R22		10K pot and switch	
C1, 7	2	100 mfd/25 vertical electrolytic capacitor	
C2, 4, 5	3	.1 mfd, 25-volt disc capacitor (104)	
C3, 14	2	47 mfd/25-volt vertical. electrolytic capacitor	
C8, 10, 13	3	01/25-volt disc capacitor (103)	
C9		470 pfd, 25-volt disc capacitor (471)	
C11, 12	2	.001 mfd, 25-volt disc capacitor (102)	
IC1		LM074 or 324 14-pin DIP note	
IC2		LM386 B8 pin DIP	
J1		Stereo jack for P1	
CL1		9-volt battery clip	
Q1		L14G3 phototransistor	
LED1		IR light-emitter diode	
PC1		HGAPC PCB	
CAP1		2 3/8-inch plastic cap	
CAP2		2-inch plastic cap	
EN1		6 3/4-inch × 2 3/8-inch sked 40 PVC tube	
HS3		High-quality headsets	
EXTUBE		3- × 2-inch schedule 40 PVC (see Figure 13-13)	
LEN1		45- × 89-millimeter convex lens	
LENRET1		2-inch plastic cap #A2 (see Figure 13-13)	

Table 13-2 Laser transmitter parts list

Ref. #	Qty	Description	DB #
R1, 5	2	100-ohm, 1/4-watt (br-blk-br) resistor	
R2		470-ohm, 1/4-watt (yel-pur-br) resistor	
R3, 4	2	27-ohm, 1/4 watt (red-pur-blk) resistor	
R6		5,000-ohm trimpot resistor 502	
R9	1	1K, 1/4-watt (br-blk-red) resistor	
R10		5.6 m, 1/4-watt (gr-bl-gr) resistor	
C1, 7	2	.01 mfd/50-volt disc capacitor	
C2		10 mfd/25-volt vertical electrolytic capacitor	
C3	1	1 mfd/25-volt vertical electrolytic capacitor	
Z1		3-volt zener diode 1N5221B	
Q1, 4	2	PN2907 PNP TO92 transistor	
Q2, 3	2	PN2222 NPN TO92 transistor	
LED1		Any high-brightness LED	
SOCK1		Four-pin transistor socket	
BH1		Four AA cell holder	
CL1		Battery clip	
S1		Small toggle switch; key or push button may be used	
BUSS24		#24 bus wire for extension leads of SOCK1	
WR6		12-inch #22 vinyl hookup wire	
PC1		CWL1 PCB	PCCWL1
LASMOD1		Laser diode with integrated optics	LASMOD
LD1		10-milliwatt, 880 nm laser diode; see text	IRLD1
HS1NK		Special fabricated aluminum heatsink, lens holder, and hardware	HSINK
LEN1		Basic lens in threaded fitting for 9-millimeter diode	LENS13
LEN2		15- × -25-millimeter double concave DCV negative glass lens	LE15-25
LEN3		24- × 75-millimeter double convex DCX glass lens	LE2475
EN1		1- × 1/16- wall × 7-inch length of clear polycarbonate tubing	
LTUB1		.835- × .6- × 2-inch length of schedule 40 1/2 inches PVC tubing	
ADJMALE		1/2-inch sked 40 female slip to male thread GENOVA 30405	
ADJFEMALE		1/2-inch sked 40 female slip to female thread GENOVA 30305	
CAP1		1-inch plastic cap	
SW1		6-32 × 1/2-inch nylon screw	
LABEL CLASSIIIBSET		Labels cert, class, and aperture	