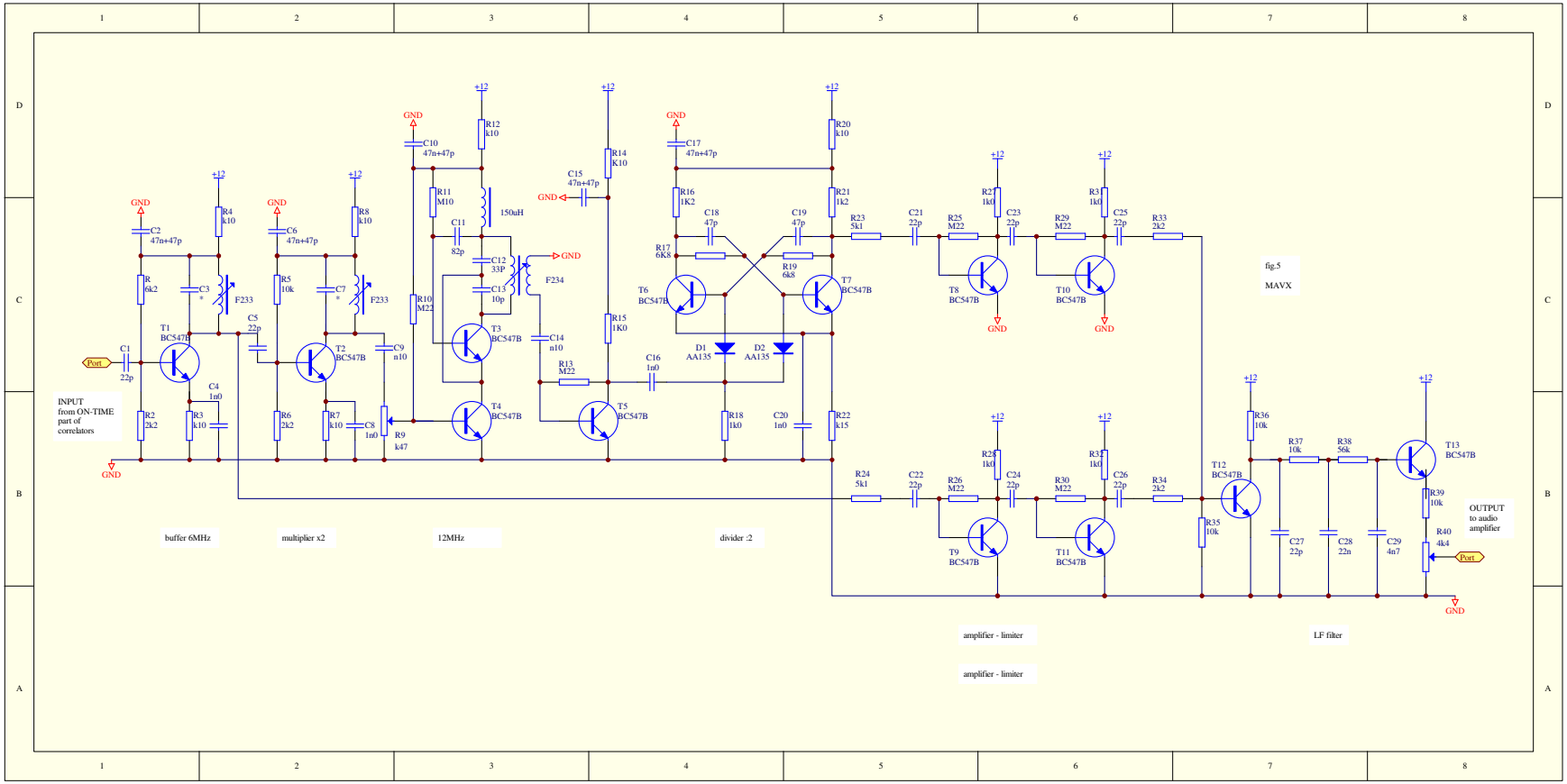
INPUT
from ON-TIME
part of
correlators
Port
C1
22p
R
6k2
C2
47n+47p
GND
R2
2k2
T1
BC547B
R3
k10
C3
*
C4
1n0
R4
k10
+12
F233
C5
22p
buffer 6MHz
C6
47n+47p
R5
10k
R6
2k2
T2
BC547B
C7
*
R7
k10
C8
1n0
R8
k10
C9
n10
R9
k47
multiplier x2
C10
47n+47p
R10
M22
R11
M10
R12
k10
C11
82p
150uH
C12
33P
C13
10p
T3
T4
BC547B
12MHz
F234
C14
n10
R13
M22
C15
47n+47p
R14
K10
R15
1K0
T5
BC547B
C17
47n+47p
R16
1K2
C18
47p
R17
6K8
T6
BC547B
D1
AA135
D2
AA135
C16
1n0
R18
1k0
C19
47p
R19
6k8
T7
BC547B
C20
1n0
divider :2
R20
k10
R21
1k2
R22
k15
R23
5k1
R24
5k1
C21
22p
C22
22p
R25
M22
R26
M22
R27
1k0
R28
1k0
C23
22p
C24
22p
T8
BC547B
T9
BC547B
R29
M22
R30
M22
R31
1k0
R32
1k0
C25
22p
C26
22p
T10
BC547B
T11
BC547B
R33
2k2
R34
2k2
amplifier - limiter
amplifier - limiter
fig.5
MAVX
R35
10k
T12
BC547B
R36
10k
R37
10k
R38
56k
C27
22p
C28
22n
C29
4n7
T13
BC547B
R39
10k
R40
4k4
OUTPUT
to audio
amplifier
LF filter