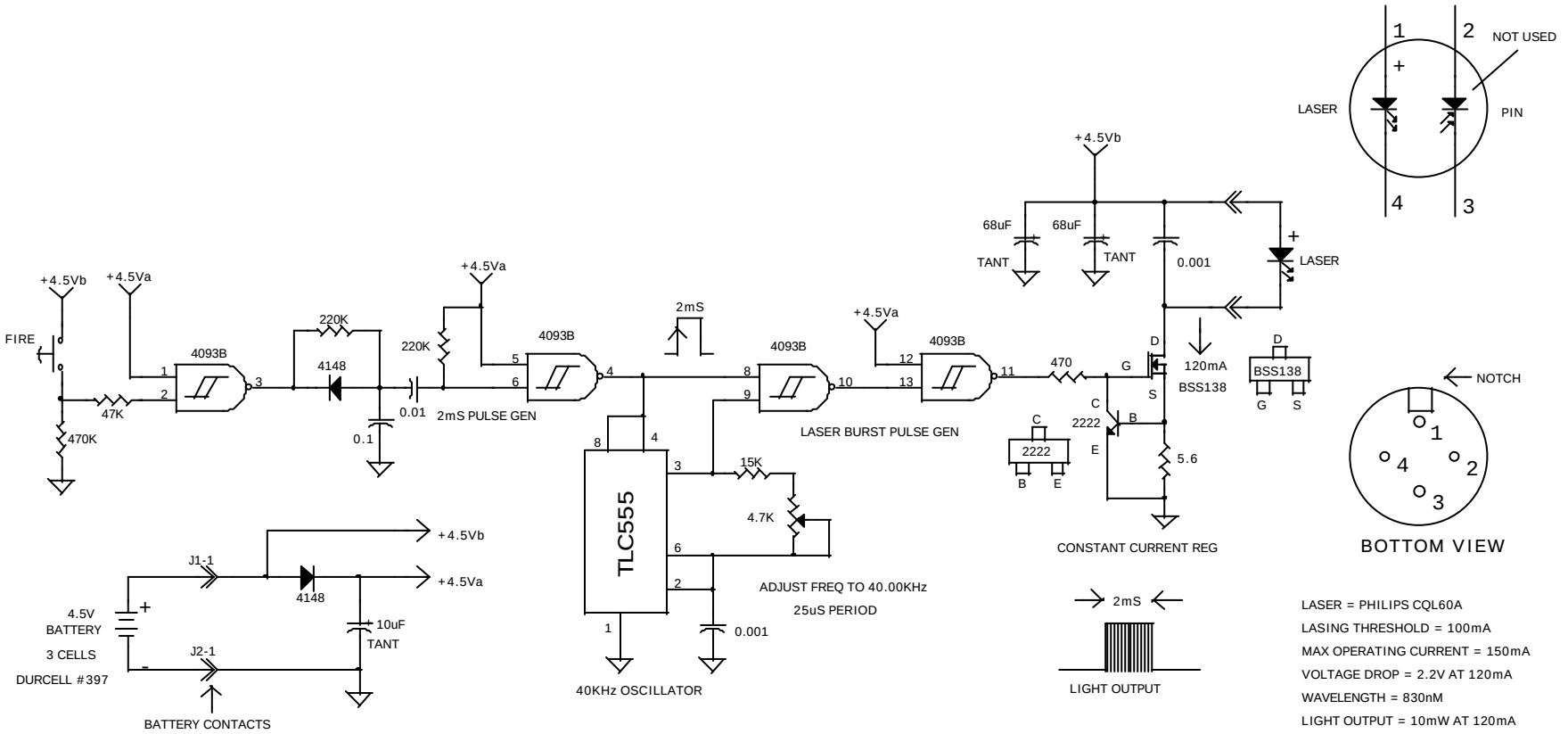
+4.5Vb
+4.5Va
FIRE
470K
47K
4093B
220K
4148
0.1
0.01
2mS PULSE GEN
+4.5Va
220K
4093B
2mS
4093B
LASER BURST PULSE GEN
+4.5Va
4093B
470
68uF
TANT
68uF
TANT
0.001
+4.5Vb
LASER
120mA
BSS138
D
G
S
BSS138
D
G
S
C
2222
B
E
5.6
CONSTANT CURRENT REG
TLC555
15K
4.7K
ADJUST FREQ TO 40.00KHz
25uS PERIOD
0.001
40KHz OSCILLATOR
+4.5Vb
+4.5Va
J1-1
4148
4.5V
BATTERY
3 CELLS
DURCELL #397
J2-1
10uF
TANT
BATTERY CONTACTS
2mS
LIGHT OUTPUT
1
2
NOT USED
+
LASER
PIN
4
3
NOTCH
BOTTOM VIEW
LASER = PHILIPS CQL60A
LASING THRESHOLD = 100mA
MAX OPERATING CURRENT = 150mA
VOLTAGE DROP = 2.2V AT 120mA
WAVELENGTH = 830nM
LIGHT OUTPUT = 10mW AT 120mA